Hyper IgM Immunodeficiency

Case Study

Hyper IgM Immunodeficiency

Hereditary deficiency of CD40L on X chromosome.

Affects Humoral and cell-mediated immunity.

Functional activity	IgM	IgD	IgG1	IgG2	IgG3	IgG4	IgA	IgE
Neutralization	+	–	++	++	++	++	++	–
Opsonization	–	–	+++	*	++	+	+	–
Sensitization for killing by NK cells	–	–	++	–	++	–	–	–
Sensitization of mast cells	–	–	+	–	+	–	–	+++
Activates complement system	+++	–	++	+	+++	–	+	–

Distribution	IgM	IgD	IgG1	IgG2	IgG3	IgG4	IgA	IgE
Transport across epithelium	+	–	–	–	–	–	+++ (dimer)	–
Transport across placenta	–	–	+++	+	++	+/–	–	–
Diffusion into extravascular sites	+/–	–	+++	+++	+++	+++	++ (monomer)	+
Mean serum level (mg ml^{-1})	1.5	0.04	9	3	1	0.5	2.1	3×10^{-5}

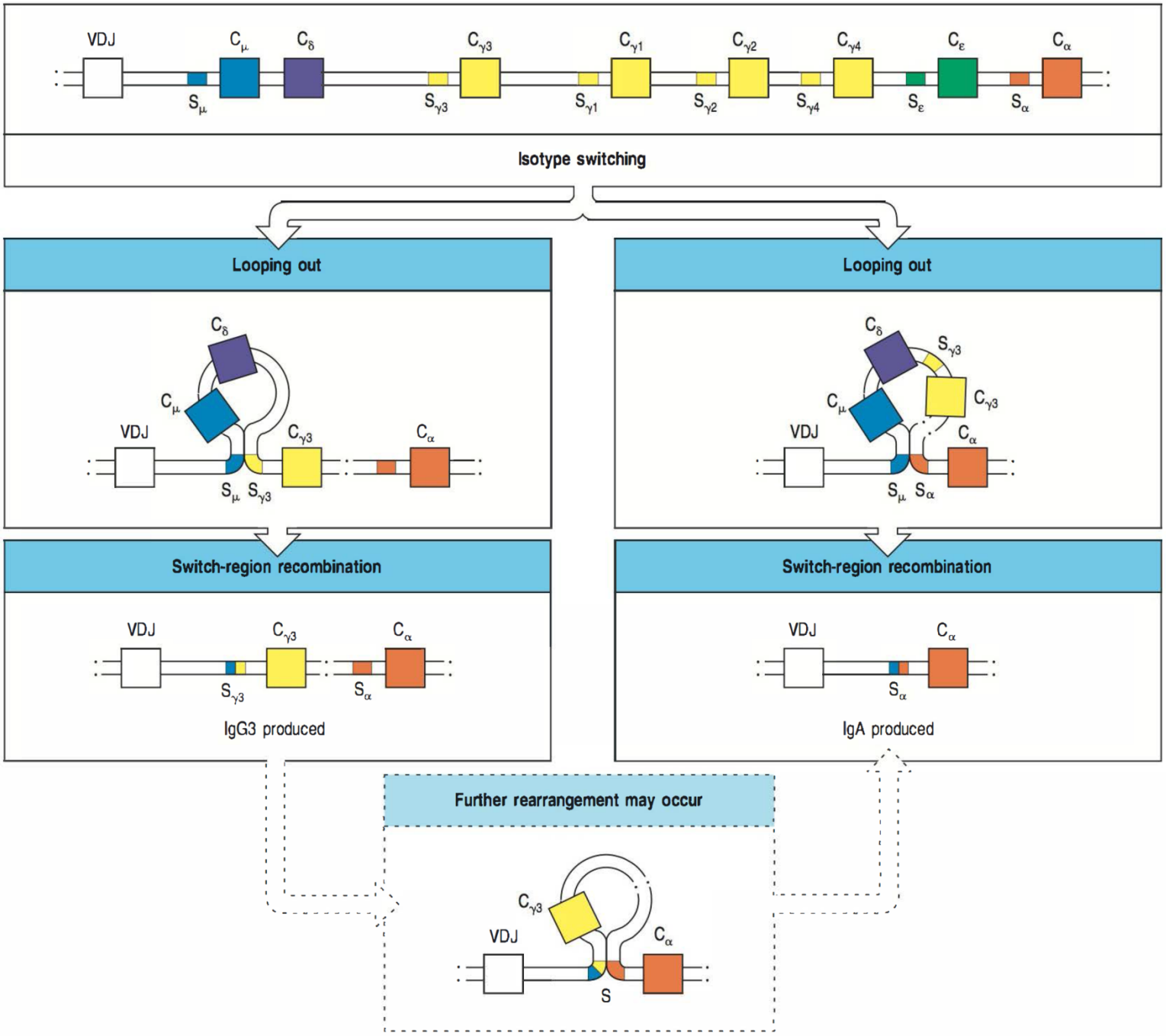
VDJ
Cμ
Cδ
Cγ3
Cγ1
Cγ2
Cγ4
Cε
Cα
Sμ
Sγ3
Sγ1
Sγ2
Sγ4
Sε
Sα
Isotype switching
Looping out
Looping out
Switch-region recombination
Switch-region recombination
IgG3 produced
IgA produced
Further rearrangement may occur
S

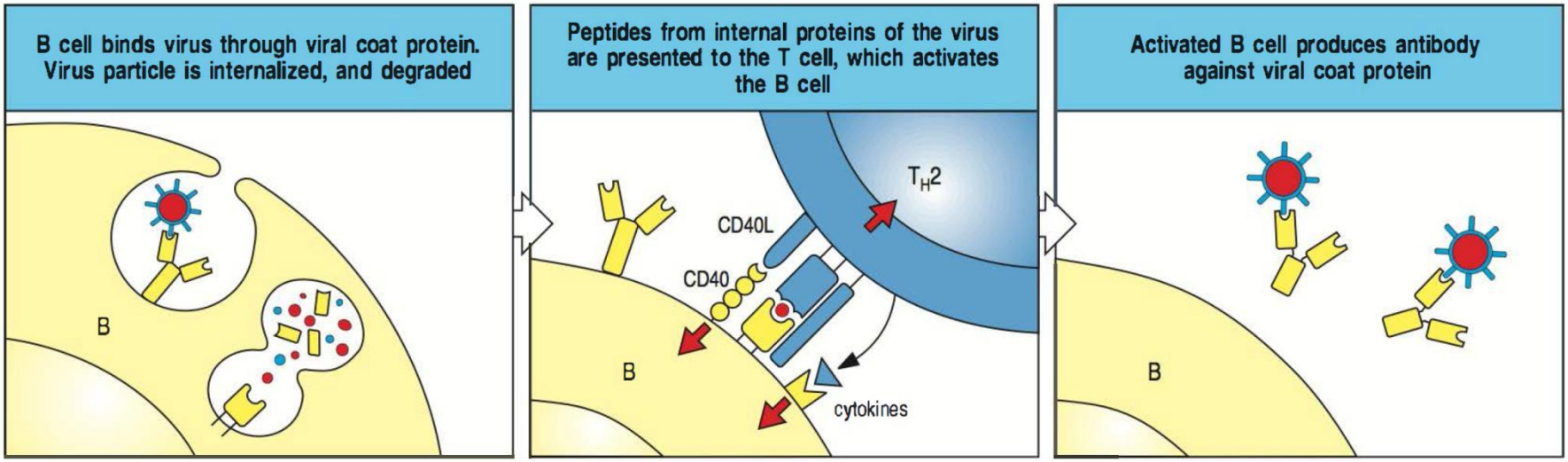
B cell binds virus through viral coat protein. Virus particle is internalized, and degraded
B
Peptides from internal proteins of the virus are presented to the T cell, which activates the B cell
T_H2
CD40L
CD40
B
cytokines
Activated B cell produces antibody against viral coat protein
B

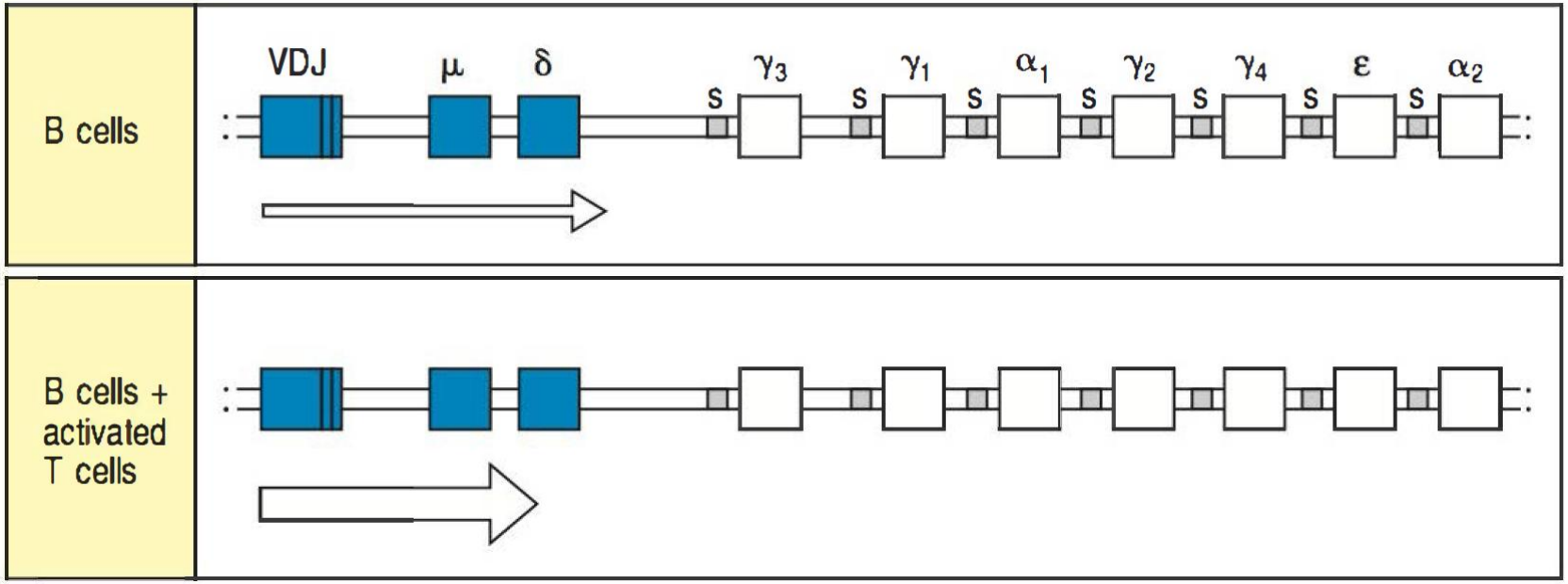
B cells
VDJ
μ
δ
S
γ3
γ1
α1
γ2
γ4
ε
α2
B cells +
activated
T cells

Case of Dennis Fawcett

Ethmoiditis at 5 years of age following recurrent sinus infections.

Pneumonia caused by *Pneumocystis carinii* at 3 years

B-hemolytic streptococcus cultured from nose and throat---No streptolysin O ab detected

Despite severe bacterial infection.....Normal WBC count

Low neutrophil count

Elevated IgM, very low counts of other isotypes

No antibodies detected against tetanus toxin or typhoid antigens despite vaccination

He is blood type O, high IgM titers detected of anti-A and anti-B

FACS experiment....

FACS demonstrates Hyper IgM Immunodeficiency

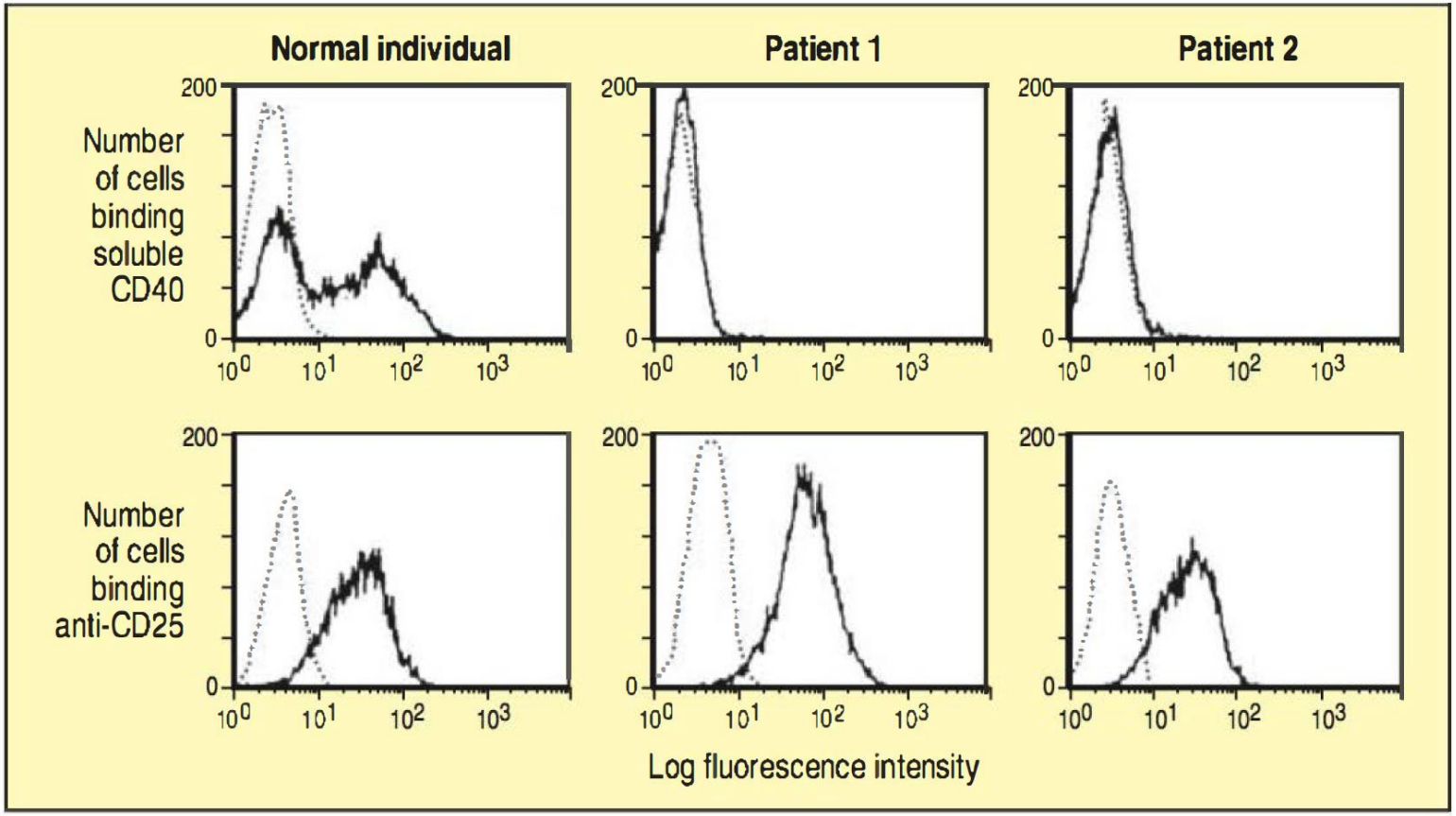

Defects in Humoral immunity (Antibodies)= Increased pyogenic infections

H. Influenzae, S. Pneumonia, S. Pyogenes, S. Aureus

(require opsonization to be phagocytosed)

CD40L has a role in activating Macrophages and inducing them to secrete GM-CSF (Neutropenia)

Defects in Cellular immunity= Opportunistic infections

Ex: *pneumocystis carinii*

Our patient had both types of infections!

If there is no class switch, how come patient's B cells express IgM and IgD?

There is no switch region between IgM and IgD

Why weren't patient's macrophages able to destroy *P. carinii*?

Activation of Macrophage to kill it require CD40-CD40L binding

Why do we have Ab against blood group but not tetanus or typhoid ags?

Blood ags are sugar groups= Can activate B cells in a T-cell independent manner. Tetanus and typhoid antigens are proteins= B cells require T cell help

Why is IgG crucial in opsonization and not IgM?

Fc receptors on phagocytes are directed against Fc portion of IgG and not IgM

How does Cyclosporin A work in graft recipients?

Inhibits transcription of CD40L gene.
Inhibits transcription of IL-2 gene

=Increased susceptibility to pyogenic and opportunistic infections.

Mode of inheritance?

X-linked recessive

Similar case but autosomal recessive= CD40 deficiency