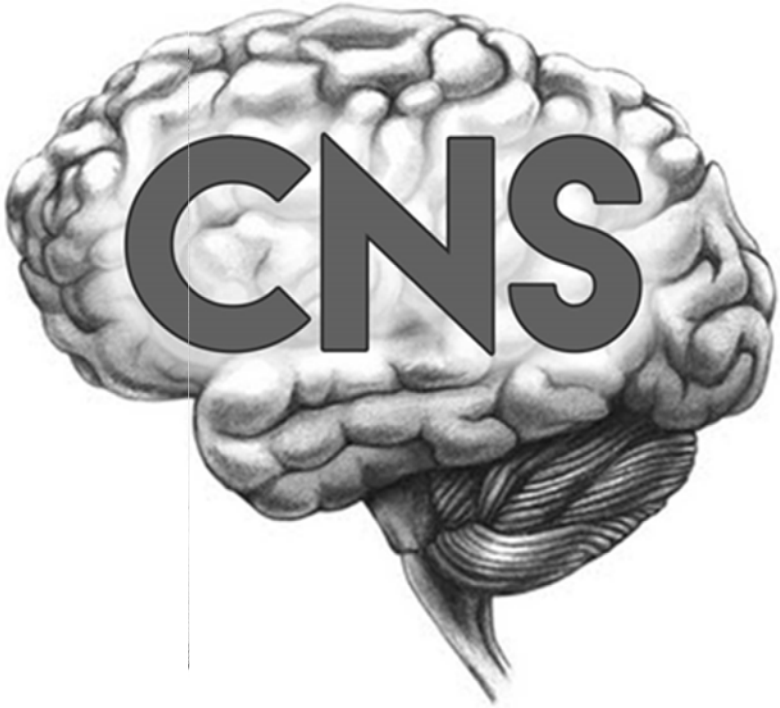

PHYSIOLOGY

☑ Sheet ○ Slide ○ Handout

Number

13

Subject

Pain Pathways

Done By

Omar Mahafza

Corrected by

Abdallah Sulaiman

Doctor

Faisal Mohammad

Date: 00/00/2016

Price:

بِسۡمِ ٱللَّهِ ٱلرَّحۡمَٰنِ ٱلرَّحِيمِ

Pain Pathways

This sheet was written according to the recording of section 1, and the order is kinda different, and as usual, hopefully made easier

In the previous lecture, we said that pain is a protective & a non-adapting mechanism because if pain receptors adapt, you're not going to remove the stimulus and thus, tissue damage will continue and might lead to gangrene.

- In diabetics, peripheral neuropathy is common, where your pain receptors undergo adaptation and by this, too much tissue damage will occur without you even noticing, eventually turning into gangrene requiring amputation.

There are 2 types of pain; e.g. If you were hit by a blade, you'll feel pain in 2 phases:

- The first part of the pain is called: fast pain (sharp/lancinating/pricking/electric/**acute** pain)
- The second part where damaged tissues release chemicals is called: slow pain (throbbing/dull-aching/nauseating/**chronic** pain)

> ***Dull-aching***: *hard to describe its locality*
> ***Nauseating***: *feeling that you want to vomit*

Pain can be stimulated mechanically, thermally or chemically and thus, there are 3 types of pain receptors:

- Mechanical pain receptors
- Thermal pain receptors
- Polymodal receptors (sensitive for mechanical, thermal & chemical stimuli)

What are the chemicals that are released by damaged tissues and can stimulate pain?

- A very important one is **bradykinin**, which is a local vasodilator in the heart that activates the kinin system.
- Other chemicals such as: serotonin, histamine, K+, Ach, proteolytic enzymes
- Some substances do not directly excite pain receptors, but they work on decreasing the threshold required to activate these receptors, such as **prostaglandins** & **substance P**.

> This is the basis for using "Aspirin/salicylic acid" to relieve pain; as these inhibit cyclooxygenase (COX) enzyme and thus **reducing** the conversion of arachidonic acid to prostaglandins, therefore increasing the threshold required to activate pain receptors. (Makes it harder for us to feel pain)

In the majority of people, threshold for thermal pain receptors is reached when the temperature is around **45 °C**; that's when tissue damage begins. In some people, tissue damage starts when temperature is a little more or a little less than that.

- Pain is transmitted to the cerebral cortex generally via a pathway that transmits mechanoreceptive sensation such as: crude touch, pressure, itching, tickling & sexual sensation which is the "Anterolateral spinothalamic pathway" and specifically by two tracts:

  - Neo-spinothalamic tract: transmits fast pain via small myelinated Aδ fibers
  - Paleo-spinothalamic tract: transmits slow pain via unmyelinated C fibers

The pathway generally: Receptors → Mother cells in the dorsal root ganglia
→ Outgoing fibers synapse with 2nd order neurons in dorsal horns of spinal segments
→ fibers cross to the other side & ascend to nuclei in the thalamus
→ fibers finally reach the Primary somatosensory area (3,1,2) in the cerebral cortex.

❖ Paleo-spinothalamic tract

- How do we know it carries slow pain?

  1) Unmyelinated C fibers have very slow rate of transmission.

  2) There are too many synapses inside the laminae of dorsal horns in spinal cord, this result in a delay in transmission.

- Slow pain transmission is associated with arousal (awakening from sleep), emotional expression & poor locality of the pain (dull-aching):

  - Too many ascending fibers in this tract end in the reticular formation of the brain stem, which is associated with the RAS system that works on the sleeping/arousal system. i.e. When you have toothache while asleep, the reticular RAS system will wake you up so you take medicine to relief the pain.

  - About 25% of the fibers will end in the "intralaminar nuclei" of the thalamus, these which send their afferents to the caudate & hypothalamus, which are associated with cognitive & emotional functions respectively
    → Emotional expression of having pain.

  - Only few fibers will end in the 3,1,2 primary somatosensory cortex, that's why slow pain is poorly localized.

Ps.) The hypothalamus is a part of the limbic system which is related to emotions.

Ps.) If you remove the cerebral cortex, or area 3,1,2, you can still perceive pain at the level of thalamus, but you won't be able to recognize the quality or locality of pain (crude pain).

On the other hand, in the Neo-spinothalamic tract:

- ✓ Fibers are small myelinated A-delta fibers and there is fewer synapses in the dorsal horn than in paleo-spinothalamic fibers, making transmission faster.
- ✓ Very few fibers end in the reticular formation
- ✓ Most fibers that reach the thalamus synapse in the ventrobasal complex (VPL), and not in the intralaminar nuclei.
- ✓ Most fibers end in the 3,1,2 cortex, making the localization more accurate.

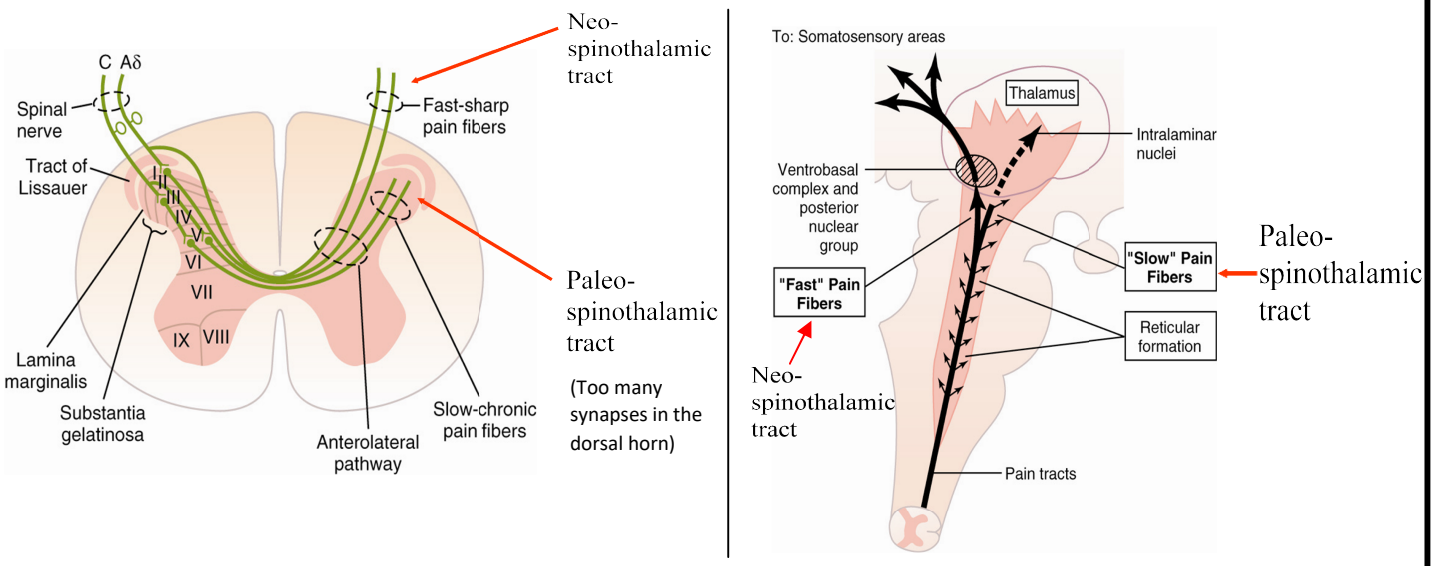

Activating fast pain requires the stimulation of mechanical & thermal receptors

Activating slow pain requires the stimulation of polymodal receptors.

Ps.) Sometimes, activation of touch receptors aid in the localization of fast pain.

Normally, the anterolateral tract is ***multi-segmental***; once fibers enter the spinal cord, they will ascend or descend 1-2 segments before they synapses and cross anterior of the central canal to the opposite side.

Syringomyelia: A disorder where the central canal enlarges and compresses the crossing fibers, so the patient will lose the senses carried by the anterolateral system bilaterally, including pain.

❖ *Visceral pain*

- Visceral organs are mesoderm-derived, while skin is ectoderm-derived.
- Visceral organs are supplied by autonomic fibers, so pain in the viscera might cause autonomic manifestations, such as changes in heart rate, BP, sweating…
- Visceral organs have a very low density of receptors, and thus it has a very low representation in the primary somatosensory area in the cerebral cortex.
- Viscera & skin that are developed from the same embryological segment will send fibers that will reach the sensory cortex, where mostly skin is represented; so when a visceral organ undergoes tissue damage, you'll feel pain in the dermatome (area of the skin) that is derived from the same segment.

  e.g.) Kidney pain will be felt at the skin covering the loin, as both are derived from the same segment.

  e.g.) Heart pain will be felt in the left arm; both derived from (C7, C8, T1, T2).
- **Highly-localized damage can become wide-spread damage.**

  E.g. Pain in the appendix might be felt initially only at the level of umbilicus, eventually the damage will be spread to somatic organs, such as the peritoneum, pain will then be felt diffusely in the lower right quadrant of the abdomen.
- How can a viscus become damaged?

  - Ischemia
  - Spasm
  - Mechanical irritation
  - Chemical irritation (e.g. pancreatitis, appendicitis, perforated peptic ulcer)
  - Distension of a hollow viscus

- Where exactly in the **reticular formation** do fibers of the paleo-spinothalamic tract end? - In many nuclei between the upper medulla & lower pons, and in the tectum, and these include:

  - Periaqueductal gray matter (around the aqueduct of sylvius)
  - Periventricular nucleus
  - Paragigantocellularis nucleus

These parts of the reticular formation also take part in the pain suppression (analgesic) system, and that system is of two types: The chemical & mechanical analgesic systems.

❖ **The chemical analgesic system (Endogenous)**

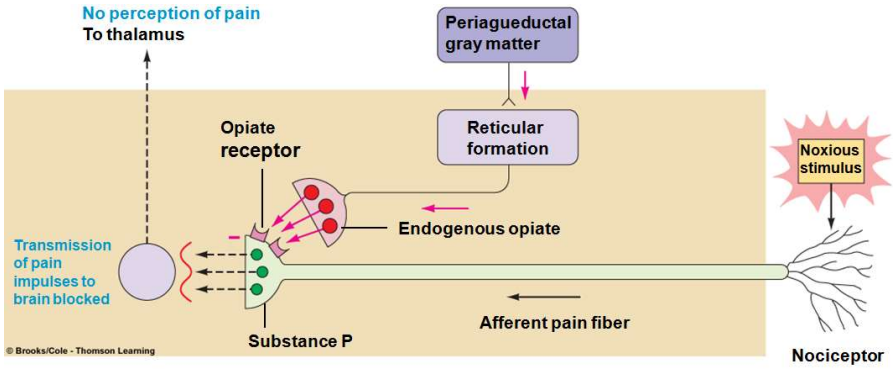

In 1979, the scientists noticed the presence of opiate receptors in human bodies, so they started to look for endogenous systems inside the body that can secrete opiates (morphine and morphine-like substances), and they found out that there are many systems inside our body that can normally produce these substances, such as:

- Met-enkephalin, Leu-enkephalin (both are penta-peptides)
- β-endorphin (secreted by the hypothalamus & pituitary gland)
- Dynorphin (200 times more effective than morphine!)

The mechanism:

1) Once pain signals reach the reticular formation, they will stimulate the periaqueductal gray matter & periventricular nuclei

2) These nuclei will release <u>excitatory enkephalin</u> that will bind opiate receptors in the Nucleus Raphe Magnus, which is between upper medulla & lower pons

3) Nucleus Raphe Magnus (NRM) once stimulated, it will release <u>serotonin</u> which will descend via descending interneurons to the spinal cord

4) The descending interneurons will transmit serotonin from NRM to nuclei inside the spinal cord and these nuclei will then release <u>inhibitory enkephalin</u>

5) The released enkephalin will produce pre-synaptic & post-synaptic inhibition on pain receptors.

   e.g.) If the damaged tissue release substance P, the endogenous enkephalin will result in pre-synaptic & post-synaptic inhibition that will prevent substance P from binding to pain receptors, and thus, pain is relieved!

Ps.) This system is thought to be the mechanism of Acupuncture (الإبر الصينية) where the opiates, like enkephalins, are extensively stimulated and secreted.

❖ **The mechanical analgesic system (Gate-control theory)**

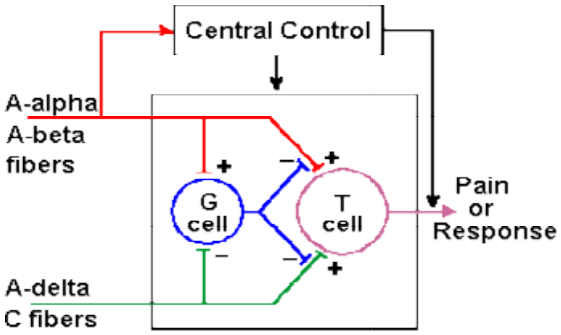

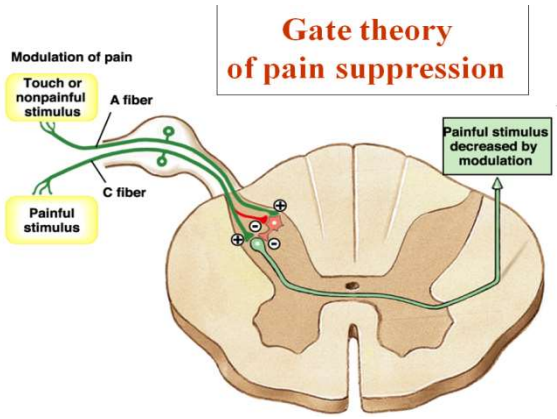

1) Small pain fibers (Aδ, C) and large tactile fibers (Aα, Aβ) will stimulate Transmission cells (T-cells) that will send pain signals from dorsal horns of spinal segments up to the thalamus.

2) Large tactile fibers (Aα, Aβ) stimulate G-cells

3) Stimulated G-cells will send interneurons that will cause pre-synaptic inhibition to the small pain fibers, therefore, you will feel less pain.

   i.e. When you feel pain in your finger for example, you will scratch it or hit it, by this you stimulate the large tactile fibers that will stimulate G-cells, which in turn inhibit small pain fibers, resulting in some pain relief.

The sheet is over, good luck :')